EXdip 910 DN50 / ANSI 2" stainless steel

- Robust design
- Integrated orbital sensor cleaning system
- Extension of sensor-lifetime and reduction of maintenance efforts
- Easy installation and removal of the sensor holder
- Stainless steel AISI 316L / 1.4404
- Immersion length 500-2500mm
- Minimum size DN50 / 2”

EXdip 910 is an immersion fitting made of stainless steel with flanged connection and integrated orbital sensor cleaning system for nominal diameter DN50 / 2”.

Specifications

Process pressure:	0...10 bar
Process temperature:	-10...140 °C
Material:	1.4404 / AISI 316L
Sealing material:	EPDM or FPM (Viton)
Immersion lengths:	0.5 up to 2.5 meters
Flange sizes:	DIN DN50 / ANSI 2"
Sensor cleaning:	integrated orbital spray cleaning (option)
Certificates:	material

Dimensions

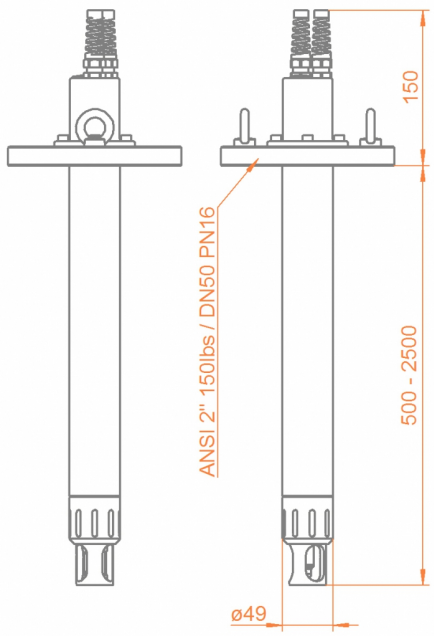

Exner Process Equipment GmbH // Carl-Metz-Straße 26 // 76275 Ettlingen // Germany
fon +49 (0)7243-94 54 29-0 // fax +49 (0)7242-94 54 29-99 // mail info@e-p-e.de
Managing directors: Detlef Exner, Michael Tottewitz // Registration court Mannheim, HRB 706 588 // VAT number DE264742343

Validity: 01.01.2023/ EXdip 910_Datasheet_en_240424

EXdip 910 DN50 / ANSI 2" stainless steel

Protective cage and coupling nut for the installation and removal of the sensor

Cleaning nozzles integrated in the protective cage of EXdip 910

Flanges according to DIN and ANSI standard

Order code

Code	Material (wetted parts)	Delivery time
4404	Stainless steel 1.4404 / 316L	3 Weeks

Code	Sealing material (wetted sealings)	Delivery time
EPD	EPDM (FDA/USP VI)	3 Weeks
FPM	FPM (Viton)	3 Weeks

Code	Sensor type	Delivery time
120	120mm PG 13,5 Ø12mm	3 Weeks
N34	for sensor types with MNPT 3/4" (only "NC")	6 Weeks
N10	for sensor types with MNPT 1" (only "NC")	6 Weeks

Code	Process connection	Delivery time
D50	Flange DN50 PN16	3 Weeks
A20	Flange ANSI 2" 150lbs	3 Weeks

Code	Immersion length	Delivery time
05	0.5 meter	3 Weeks
10	1 meter	3 Weeks
15	1.5 meters	3 Weeks
20	2 meters	3 Weeks
25	2.5 meters	3 Weeks

Code	Cleaning	Delivery time
NC	without	3 Weeks
SC	with integrated spray cleaning	3 Weeks

Validity: 01.01.2023/ EXdip 910_Datasheet_en_240424

Exner Process Equipment GmbH // Carl-Metz-Straße 26 // 76275 Ettlingen // Germany
fon +49 (0)7243-94 54 29-0 // fax +49 (0)7242-94 54 29-99 // mail info@e-p-e.de
Managing directors: Detlef Exner, Michael Tottewitz // Registration court Mannheim, HRB 706 588 // VAT number DE264742343