EXflow 710 / 720

TECHNICAL INFORMATION

Flow-through fitting

EXNER
Process Equipment

Imprint

Distributed by:

Exner Process Equipment GmbH
Carl-Metz-Str. 26
D-76275 Ettlingen

Date of issue: 2023-06-20

As per: 25.02.2019

File: Technical informatio EXflow 190225

Table of contents

1 Technical data

1.1 Standards

The following standards were applied when manufacturing the flow-through fitting:

- Pressure Equipment Directive

1.2 Material properties

Wetted components			
Flow-through fitting			
EXflow	Stainless steel		Plastic
710	1.4571 / 316TI	1.4571 / 316TI Lined with ETFE	
720			PVDF

NOTE

Observe the pressure and temperature diagrams.

1.3 Dimensions

EXflow 710 measurements				
	Process connector Flange		Process connector Welding connector	
	DN 25 / ANSI 1"	DN 50 / ANSI 2"	DN 25 / 1"	DN 50 / 2"
180°	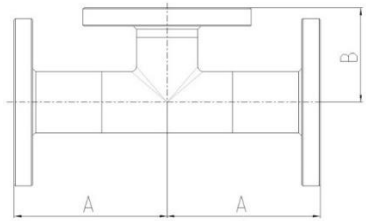		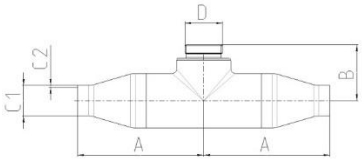	
90°	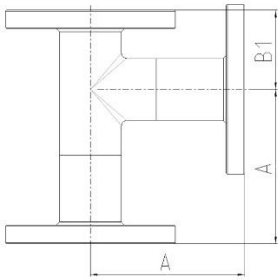		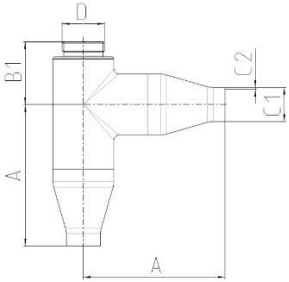	

Measure-ments [mm]	Probe housing connector Flange DN50 / ANSI 2"				Probe housing connector G1 ¼"			
	DN 25	ANSI 1"	DN 50	ANSI 2"	DIN 25	1"	DN 50	2"
A	150	150	150	150	140	140	137	137
B	93	93	93	93	62	62	62	62
B1	77	77	77	77	62	62	62	62
C1	-	-	-	-	33.7	33.7	60.3	60.3
C2	-	-	-	-	2	2	2	2
D	G1 ¼	G1 ¼	G1 ¼	G1 ¼	G1 ¼	G1 ¼	G1 ¼	G1 ¼

EXflow 720 measurements				
	Process connector Flange		Process connector Welding connector	
	DN 25 / ANSI 1“	DN 50 / ANSI 2“	DN 25 / 1“	DN 50 / 2“
180° 90°	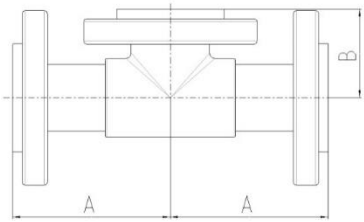		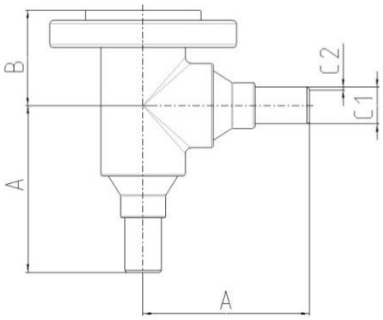	

Measure-ments [mm]	Probe housing connector Flange DN50 / ANSI 2“							
	DN 25	ANSI 1“	DN 50	ANSI 2“	DIN 25	1“	DN 50	2“
A	150	150	150	150	147	147	147	147
B	84	84	84	84	84	84	84	84
C1	-	-	-	-	32	32	63	63
C2	-	-	-	-	2.4	2.4	2	2

1.4 EXflow 710 process conditions

Max. permissible pressure PS: 16 bar

Max. permissible temperature TS: 140 °C

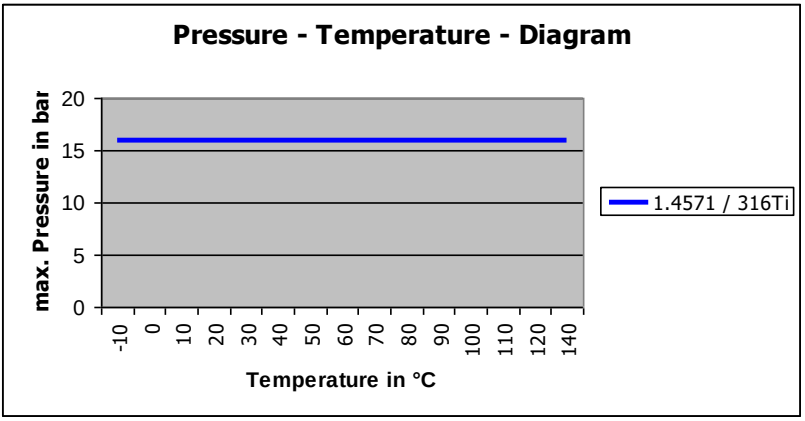

Fig. 1: Pressure-temperature-diagram of EXflow 710

1.5 EXflow 720 process conditions

Max. permissible pressure PS: 6 bar

Max. permissible temperature TS: 120 °C

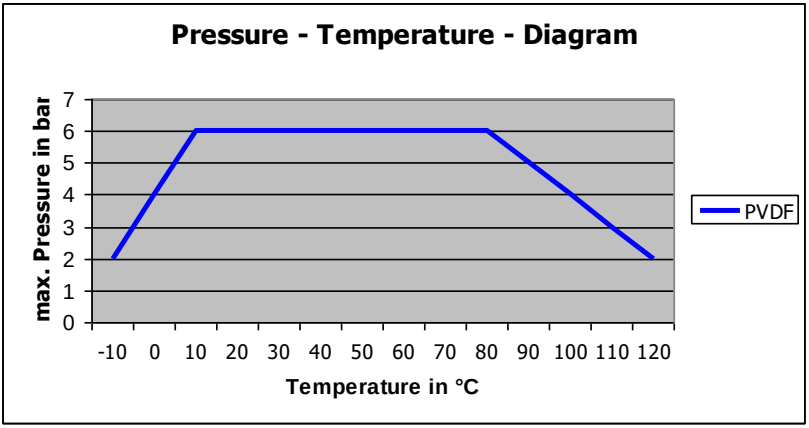

Fig. 2: Pressure-temperature-diagram of EXflow 720

1.6 Identification plate

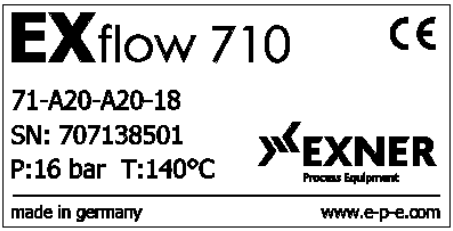

Fig. 3: Identification plate

2 Product description

2.1 EXflow flow-through fitting

2.1.1 Connections

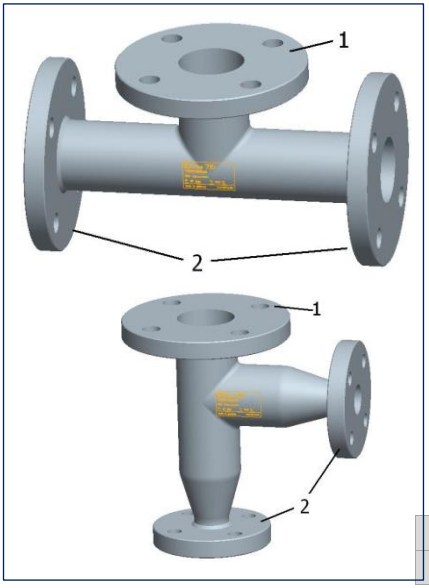

1	Probe housing connector
2	Process connector

Fig. 4: EXflow flow-through fitting

2.1.2 Versions

To integrate the flow-through fitting EXflow into the process, you can choose between different process connections, flow directions (90° or 180°) and nominal widths. In order to meet the requirements of the versatile process properties, the flow-through fitting EXflow is manufactured from stainless steel or plastic.

2.2 Process integration

Probe housing / Sensor

The flow-through fitting EXflow is integrated into the process pipe and accommodates a probe housing in which a sensor is installed.

Transmitter

The sensor is connected to a transmitter and can thus transfer its measuring results.

PLS

The transmitter can be connected with a process control system.

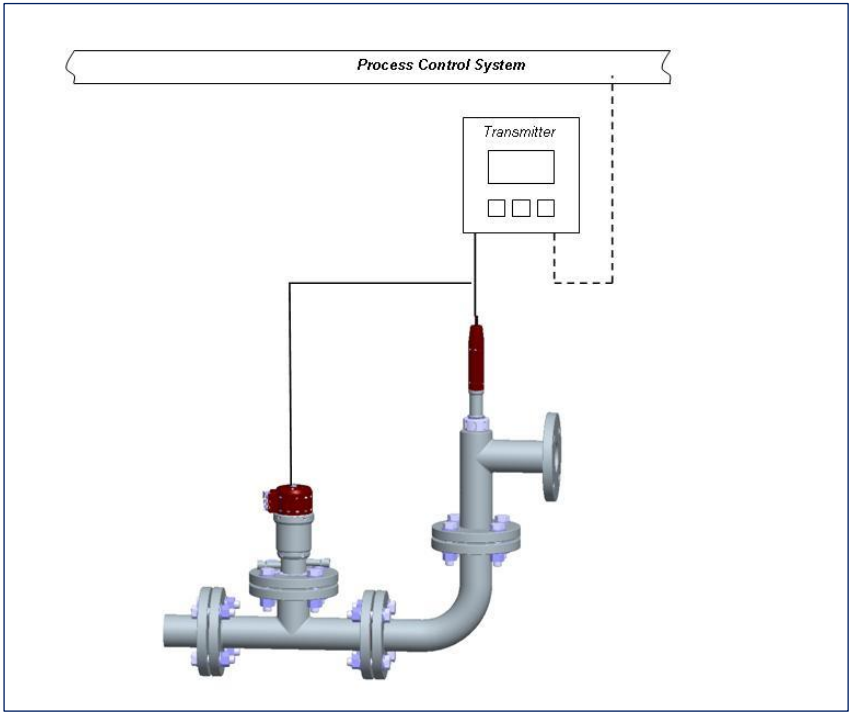

Fig. 5: EXflow flow-through fitting

Pressure / Temperature

The process pressure and temperature conditions process are relevant for choosing the suitable flow-through fitting. Dependent on the temperature, the stainless steel immersion fitting can be used up to a pressure of 16 bar and the plastic version up to a pressure of 6 bar. The process temperature must be between -10 °C and 140 °C.

NOTE

Observe the pressure and temperature diagrams.

Installation position

Principally, the unit may be installed in any position. In order to obtain reliable measurement results, the sensor properties are decisive.

Total measuring point

Combine the flow-through fitting EXflow with suitable a suitable probe housing as a complete measuring unit. Thus, you obtain optimal measuring results.

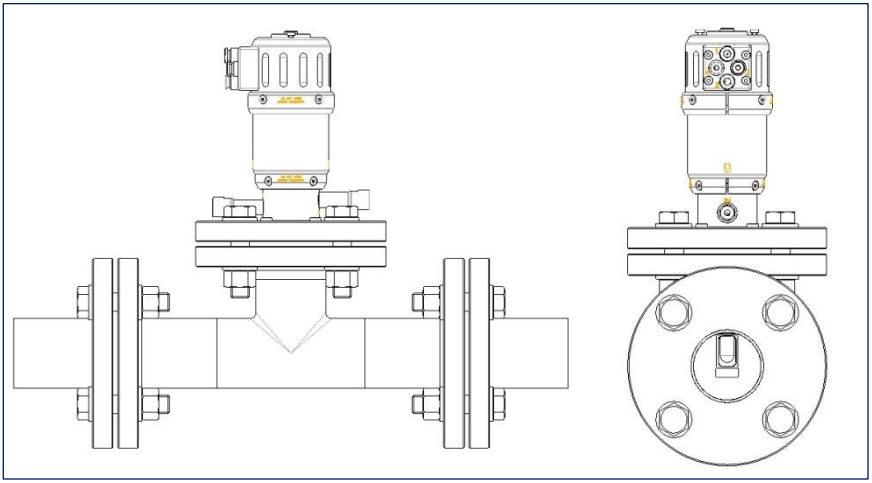

Fig. 6: Flow-through fitting with EXtract

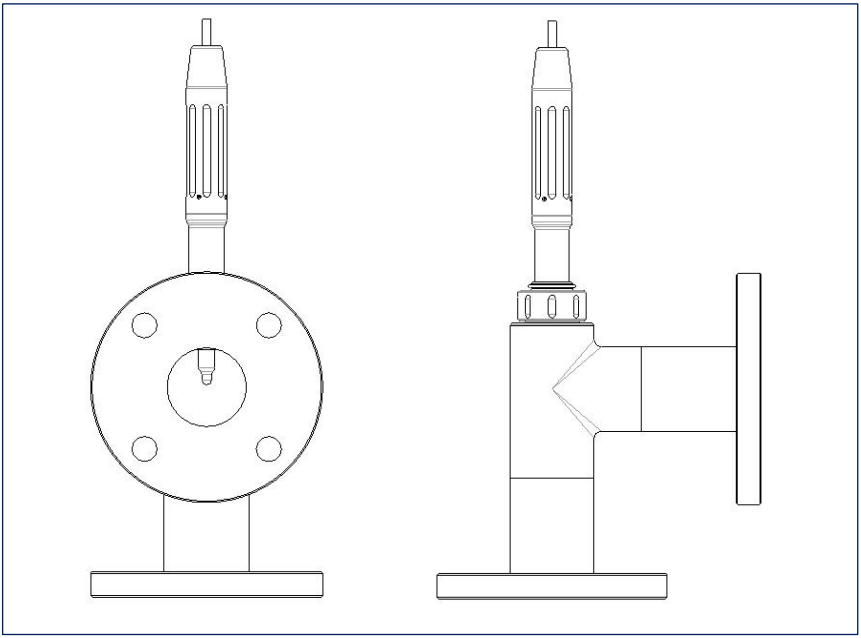

Fig. 7: Flow-through fitting with EXstatic

3 Ordering structure

3.1 Flow-through fitting EXflow 710

	Code	Fitting material (wetted parts)			
	71	Stainless steel, 1.4571 / 316TI			
	ET	Stainless steel 1.4571 /316 TI ETFE lined			
	XX	Special version			
		Code	Process connector		
		D25	DN25 flange		
		D50	DN50 PN16 flange		
		A10	ANSI 1" flange		
		A20	ANSI 2" 150 lbs flange		
		W25	Weld end DN25 / 1" (not for ET")		
		W50	Weld end DN50 / 2" (not for ET")		
		XXX	Special version		
			Code	Probe housing connector	
			D50	DN50 flange	
			A20	ANSI 2" flange	
			I25	G 1 ¼" connector (not for ET)	
			N34	Female thread NPT ¾" (not for "ET")	
			G34	Female thread NPT ¾" (not for "ET")	
			XXX	Special version	
				Code	Flow direction
				18	180°
				09	90°
EXflow 710					Order code

3.2 Flow-through fitting EXflow 720

	Code	Fitting material (wetted parts)			
	PV	PVDF			
	XX	Special version			
		Code	Process connector		
		D25	DN25 flange		
		D50	DN50 PN16 flange		
		A10	ANSI 1" flange		
		A20	ANSI 2" 150 lbs flange		
		W25	weld end DN25 / 1"		
		W50	weld end DN50 / 2"		
		XXX	Special version		
			Code	Probe housing connector	
			D50	DN50 flange	
			A20	ANSI 2" flange	
			XXX	Special version	
				Code	Flow direction
				18	180°
				09	90°
EXflow 720					Order code

4 Certificates and compliance

EG-Declaration of conformity

for

Flow unit EXflow type 710

We declare under our sole responsibility that the product, to which this declaration relates is in conformity with the following standards or the normative documents:

- Druckgeräterichtlinie 2014/68/EU
- AD 2000 Regelwerk

This declaration applies to all identical versions of the product, manufactured according to the development-, design- and manufacturing-drawings and the descriptions, which are part of this declaration.

The applied conformity assessment procedure was according to
Appendix II of the PED 2014/68/EU, Module A.
The usable liquids are rated according article 13/1a.

This declaration is given by the manufacturer.

Name of company: **Exner Process Equipment GmbH**
Address: Carl-Metz-Straße 26
D-76275 Ettlingen

Germany

EXNER
Process Equipment GmbH
Carl-Metz-Straße 26
76275 Ettlingen // Germany
fon 07243-945429-0 fax -99
www.e-p-e.de

Ettlingen — Place
02.01.2020 — Date
Detlef Exner
General Manager

EG-Declaration of conformity

for

Flow unit EXflow type 720

We declare under our sole responsibility that the product, to which this declaration relates is in conformity with the following standards or the normative documents:

- Pressure Equipment Directive 2014/68/EU
- Standard DVS 2205

This declaration applies to all identical versions of the product, manufactured according to the development-, design- and manufacturing-drawings and the descriptions, which are part of this declaration.

The applied conformity assessment procedure was according to
Appendix II of the PED 2014/68/EU, Module A.
The usable liquids are rated according article 13/1a.

This declaration is given by the manufacturer.

Name of company: **Exner Process Equipment GmbH**
Address: Carl-Metz-Straße 26
D-76275 Ettlingen

Germany

EXNER
Process Equipment GmbH
Carl-Metz-Straße 26
76275 Ettlingen // Germany
fon 07243-945429-0 fax -99
www.e-p-e.de

Ettlingen — Place
02.01.2020 — Date
Detlef Exner
General Manager

Exner Process Equipment GmbH
Carl-Metz-Str. 26
D-76275 Ettlingen
Germany

tel +49 (0)7243-94 54 29-0
fax +49 (0)7243-94 54 29-99
mail info@e-p-e.de

www.e-p-e.com